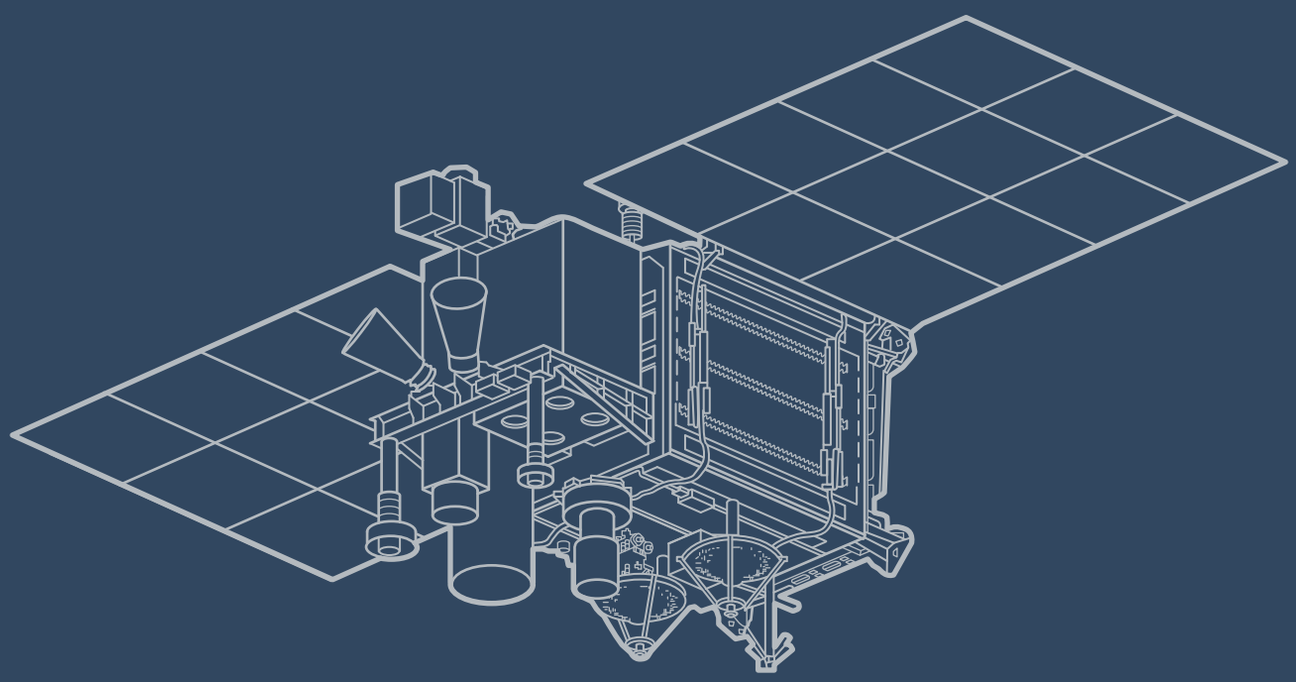

KANOPUS-V

REAL-TIME MONITORING OF MAN-MADE AND NATURAL EMERGENCIES SPACE COMPLEX

STATE SPACE CORPORATION “ROSCOSMOS”

RESEARCH AND DEVELOPMENT COMPANY OF THE REPUBLIC OF BELARUS IN OPTOL ELECTRONICS

“VNIIEM Corporation” JC

JSC “RUSSIAN SPACE SYSTEMS”

ROSCOSMOS RSS RUSSIAN SPACE SYSTEMS NTsOMZ

Putian, China, Kanopus-V satellite image

Belgorod Region, Russia, Kanopus-V satellite image

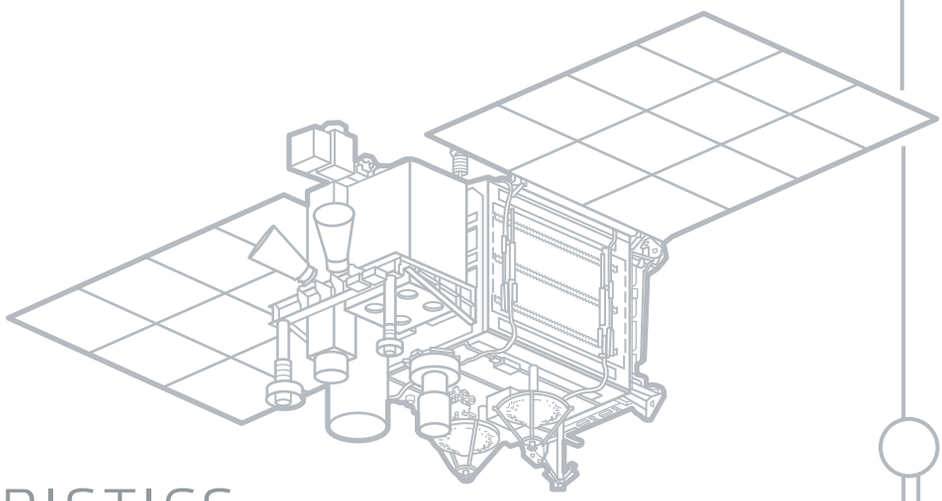

MAIN CHARACTERISTICS

- Orbit: circular sun-synchronous, height average – 510 km, inclination – 97.4º
- Revisit period: 5–16 days
- The ability to program turns around the yaw and pitchaxis
- Active operational life span: min. 5 years

LAUNCH DATE

- Kanopus-V1 – 22 July, 2012
- Kanopus-V-IK – 14 July, 2017
- Kanopus-V3 – 1 February, 2018
- Kanopus-V4 – 1 Fedruary, 2018

ACQUISITION MODES

Route

MISSION PURPOSE

Near real-time acquiring of highly informative data in visible and near infrared spectral range for ecological monitoring, natural resources inventory, mineral exploration, and topographic mapping

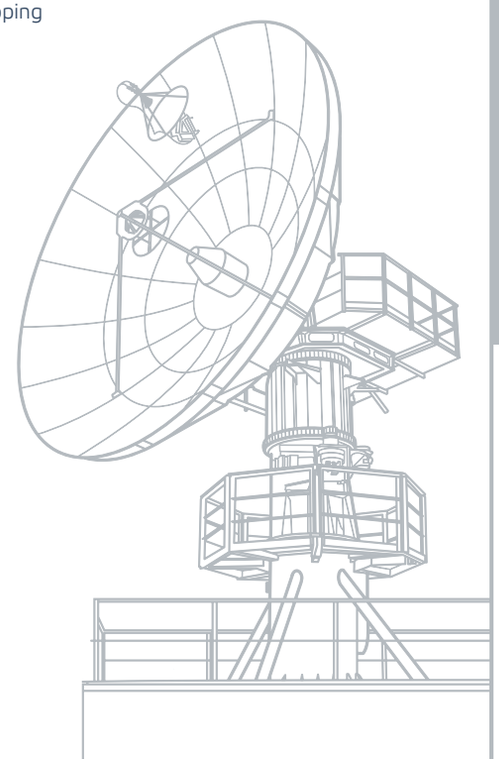

Data received and processed
by Russian Space Remote Sensing Systems Operator –
Research Center for Earth Operative Monitoring of JSC “Russian Space Systems”

KANOPUS-V DESIGN

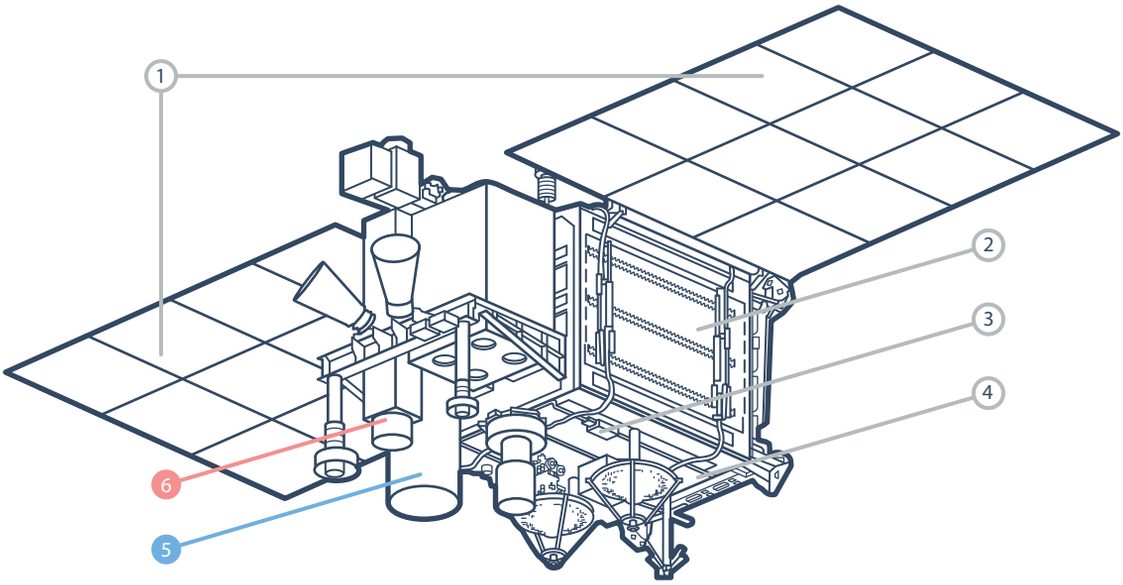

1. Solar panels
2. Housing assembly
3. Transmitter and antenna feeder system at 8.2 GHz for target information transferring
4. Service platform
5. PANCHROMATIC OPTICAL SYSTEM (PSS)
6. MULTISPECTRAL OPTICAL SYSTEM (MSS)

ACQUISITION MODES

PANCHROMATIC OPTICAL SYSTEM (PSS)

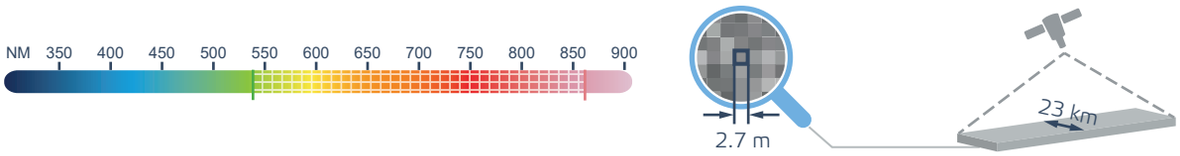

MULTISPECTRAL OPTICAL SYSTEM (MSS)

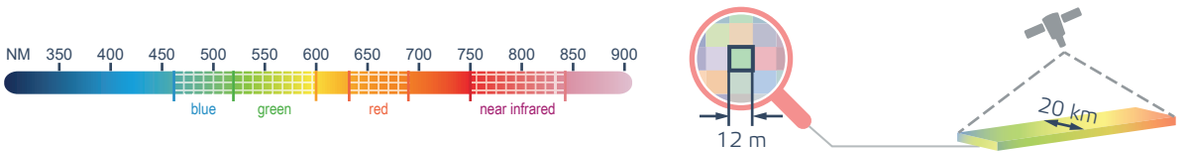

MSU-IK-SR – MULTI-CHANNEL MEDIUM AND FAR IR RANGE RADIOMETER*

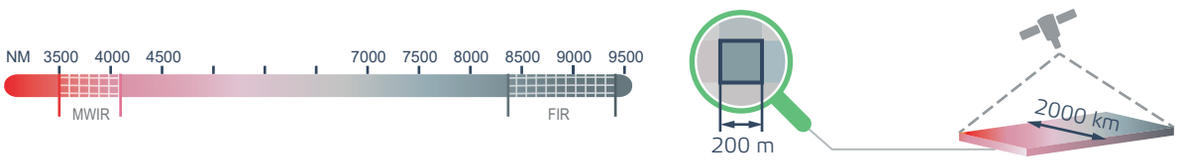

* for Kanopus-V-IK

APPLICATION AREAS

AGRICULTURE

- Agricultural land inventory, rational use control of agricultural land, revealing of idle land;
- Monitoring of crop condition on different vegetative stages (biomass buildup, degree of wetting), also judgment of seedlings;
- Determination of unauthorized construction zones and unauthorized occupation of agricultural land;
- Resolution of cases concerning land-use

FOREST MANAGEMENT

- Determination, control and monitoring of unauthorized forest fell;
- Examination and mapping of negative processes which can lead to degradation and destruction of woodlands (influence of pests and diseases, dehydration or over wetting of forests);
- Determination of forest ecosystem degradation areas (burnt spot, failed woodlands, windfall areas, dehydration areas, insect activity, and etc.)

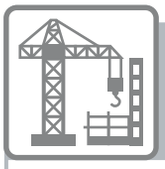

CONSTRUCTION

- Inventory of existing and projected industrial objects with generation of large-scale thematic maps and plans;
- Information support of planning and surveying for the purposes of construction;
- Monitoring of electricity infrastructure change, water sector, auto and railway infrastructure;
- Dynamic analysis of vegetation over the city area and also valuation of community landscape

SUBSURFACE RESOURCES MANAGEMENT

- Mineral resources extraction and transport infrastructure monitoring and mapping (including surface mines, open mines, dump pits, trailing dumps);
- Locating illegal sites of resources extraction;
- Eco unfriendly objects detection (including industrial extractive objects, waste management, transport and energy production facilities);
- Oil spills detection in oil extraction and transportation areas

APPLICATION AREAS

MAPPING

- Creating and updating of ground map with scale of 1:25000;
- Creating and updating of ground map with scale of 1:50000;
- Creating and updating of ground map with scale of 1:100000;
- Creating and updating of ground map with scale of 1:200000

EMERGENCIES

- Applying Earth observation data in complex emergencies prognosis;
- Monitoring all stages of emergencies occurrence, accurate mapping of consequences;
- Short-term prognosis and modelling of occurred emergencies, modelling of floods and wildfires

ECOLOGY

- Monitoring of existing SPNR;
- Determination of SPNR security violation – forestfell, construction, changes of landscape, dumps;
- Landscapeand woodland mapping within SPNR;
- Organization and detailing of existing and constructed SPNR boundaries;
- Monitoring of existing authorized and illegal storage areas of solid domestic waste, factory waste, determination of upcoming dumps (within residential, industrial construction and also buffer zones of main settlements);
- Integrated control of domestic and industrial waste recovery activities

ICE CONDITIONS

- Control of ice conditions in high latitudes;
- Selection of ship traffic optimal rate;
- Dueice conditions notice